BOMBAY KIDS

# 5950469
# K-Retro Game Table
## Parts List

| | | |
|---|---|---|
| A. | Game Board | 1 pc |
| B. | Top Assembly | 1 pc |
| C. | Side Assemblies | 2 pcs |
| D. | Connecting Bolts | 4 pcs |
| E. | Eccentric Cams | 4 pcs |
| F. | Allen Head Bolts | 6 pcs |
| G. | Lock Washers | 6 pcs |
| H. | Flat Washers | 6 pcs |
| I. | Phillips Head Screwdriver | 1 pc |
| J. | Flat Head Screwdriver | 1 pc |
| K. | Allen Head Wrench | 1 pc |
| L. | Optional Allen Head Screwdriver Bit | 1 pc |

* Please make sure that you have all the parts and hardware indicated above before you begin assembly of this item.
* This item should be assembled on a soft surface to prevent scratching the finish during assembly.
* This item may require periodic tightening.
* Take care not to overtighten bolts if using supplied Allen Head Screwdriver Bit.
* This item is to be assembled by an adult and is not intended to be taken apart by a child.

**Note: Chess and Checker pieces are included with this product.**

## Hardware Illustrations

D. Connecting Bolt

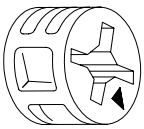

E. Eccentric Cam

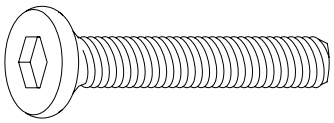

F. Allen Head Bolt

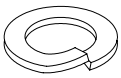

G. Lock Washer

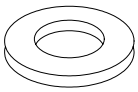

H. Flat Washer

BOMBAY KIDS

# 5950469
# K-Retro Game Table

## Assembly Instructions

1. **Attach Connecting Bolts (D)** Place the Top Assembly (B) upside down on a soft surface. Align the exposed threads of the Connecting Bolts (D) with the pre-threaded holes in Top Assembly (B). Tighten by turning in a clockwise direction using Flat Head Screwdriver (J). See Illustration
2. **Attach Side Assemblies (C)** Insert the Connecting Bolts (D) in the Top Assembly (A) into the pre-drilled holes in the Side Assembies (C) so that dowels of the Side Assemblies (C) insert into the pre-drilled holes in the Top Assembly (B). Insert the Eccentric Cams (E) into the pre-drilled holes of Side Assembies (C). Make sure the groove in the Eccentric Cams (E) faces out and the arrow points towards the Connecting Bolts (D). Use the Phillips Head Screwdriver (I) to adjust the Eccentric Cams (E) and to lock the inserted Connecting Bolts (D) in place by turning in a clockwise direction. Align the pre-threaded holes in the Side Assemblies (C) with the pre-drilled holes in the apron of Top Assembly (B). Secure with Allen Head Bolts (F), Lock Washers (G) and Flat Washers (H) using Allen Head Tool (K or L). See Illustration.
3. **Attach Game Board (A)** Put the table upright. Put the Game Board (A) into to the Top Assembly (B).

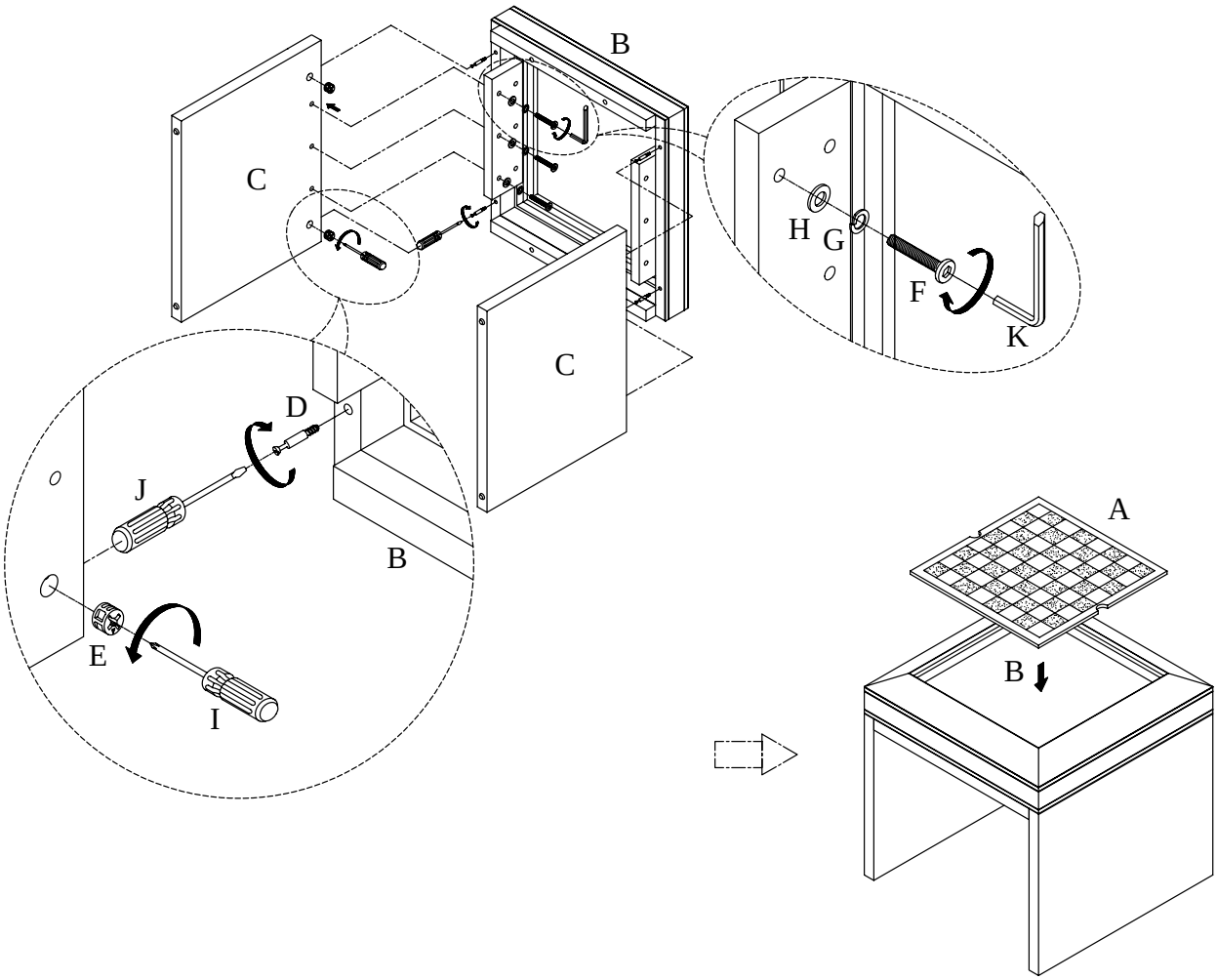




R2-04-14-05